Contents - Fence Fittings

Effective April 2010

UNIVERSAL FENCE FITTING SYSTEM - COMPONENTS

Rail Clamps 3
Post Clamps 3
Connector 3
Wall Bracket 3

PIPE CLAMP FITTINGS

Fixed Tees 4
Fixed Crosses 4
Fixed Corners 5
Five Way Tees 5
Post & Rail Joiners / Extenders 6

CAPS

Round Post Caps - Drive On 7
Round Post Caps - Domed - Drive On 7
Dome Plugs 7
Round Post Caps - Flat 8
Oval Tube Caps 8
Square Tube Post Caps 8
Square Tube Post Caps - Flat 8
Round Plastic Caps 9
Rectangular Plastic Caps 9
Square Tube Plastic Caps 10
Square Tube Plastic Caps - Flat 10

BRACKETS

Rail Brackets - Single Lug 11-12
Rail Brackets - Double Lug 13-14
Adjustable Rail Brackets 15
Security Rail Brackets 16
Adjustable Security Rail Bracket 16
Fence Panel 'U' Clips 16
Rail Tube End Brackets 17
Rail Brackets 17
Rail Angle Brackets 17
Rail Adjustable Angle Bracket 18
Rail Long Plate Bracket 18
Rail 'J' Bracket 18
Rail Holder Bracket 19
Rail Plates 19
Rail Saddles 19
Rail Joiners 19
Post Brackets 20
Shark Fin Post / Wall Bracket 21

FLANGES

Square Flange Plates -Weld On 22
Rectangular Flange Plates -Weld On 22
Flange Covers 22
Square Flanges 23
Square RHS Flange 23
Oval Flanges 23
Round Flanges 23

TEMPORARY FENCE FITTINGS

Fence Clamp Hinges 24
Fence Clamps 24

FENCE ACCESSORIES

Wire Strainer 25
Star Post Cap 25
Square Post Extension 25

* For terms & conditions of sale please read the last page of this catalogue

PIPE DIMENSIONS

NOMINAL BORE (ID) (NB)		OUTSIDE DIAMETER	
IMPERIAL	METRIC	IMPERIAL	METRIC
1/2 "	15 mm	27/32 " (0.844")	21.3 mm
3/4 "	20 mm	1 1/16" (1.062")	26.9 mm
1 "	25 mm	1 11/32 " (1.343")	33.7 mm
1 1/4 "	32 mm	1 11/16 " (1.687")	42.4 mm
1 1/2 "	40 mm	1 29/32 " (1.906")	48.3 mm
2 "	50 mm	2 3/8" (2.375")	60.3 mm
2 1/2 "	65 mm	3 " (3.000")	76.1 mm
3 "	80 mm	3 1/2 " (3.500")	88.9 mm
3 1/2 "	90 mm	4 " (4.000")	101.6 mm
4 "	100 mm	4 1/2" (4.500")	114.3 mm
5"	125 mm	5" (5.5")	139.7 mm
6"	150 mm	6" (6.5")	165.1 mm

Unless otherwise specified all DOWNEE RMD component sizes relate to nominal bore pipe dimensions (NB)

© COPYRIGHT 2010 DOWNEE

ALL DIMENSIONS IN MILLIMETERS UNLESS OTHERWISE STATED

SPECIFICATIONS SUBJECT TO CHANGE WITHOUT NOTICE

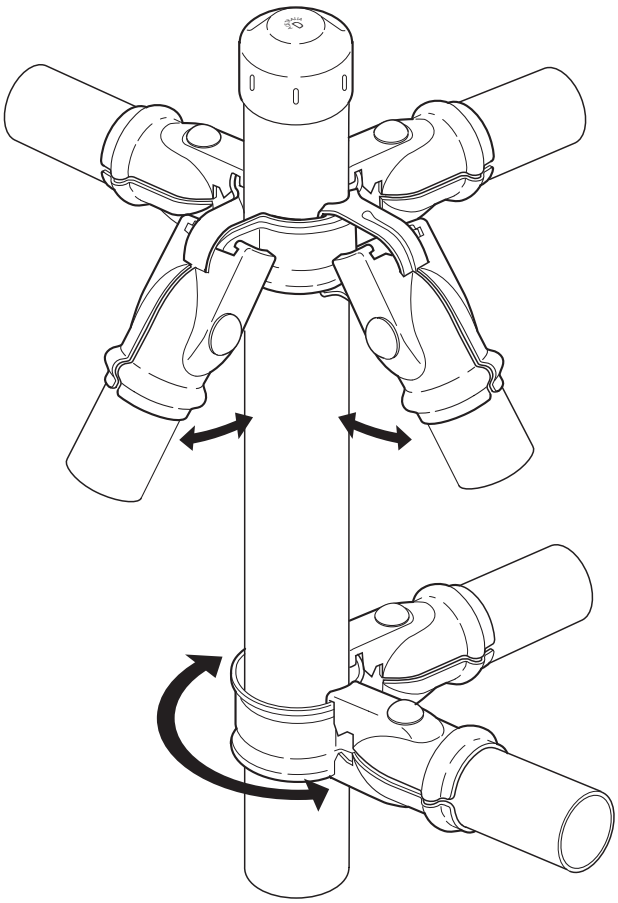

APPLICATIONS:

SPORTS OVALS – MULTI FACETED FENCES
AWKWARD SHAPED ENCLOSURES – MULTIPLE ENCLOSURES
FENCING INTO TIGHT CORNERS – TENNIS COURTS – CRICKET NETS
BASE BALL NETS – SHADE STRUCTURES – FENCING UP SLOPES

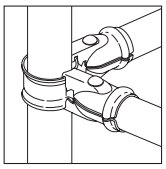

2,3,4 & UP TO 8 WAY ADJUSTABLE FITTING COMBINATIONS POSSIBLE.

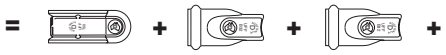

INSTALLATION NOTES:

1. ALL RAIL CLAMPS ARE COMPLETELY INTERCHANGEABLE WITH ALL POST CLAMPS.
2. FOR NEATNESS OF INSTALLATION POST CLAMP ATTACHMENT EAR IS HIDDEN BY FIRST RAIL CLAMP.

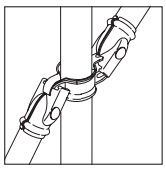

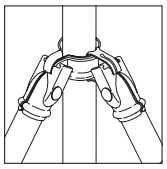

VERTICAL RAIL ADJUSTMENT FROM 30° TO 150° FOR FENCING UP SLOPES OR ADDING MULTIPLE INTEGRAL STAYS.

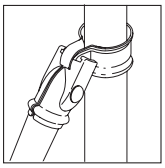

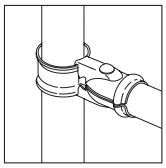

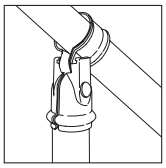

© COPYRIGHT 2010 DOWNEE

ALL DIMENSIONS IN MILLIMETERS UNLESS OTHERWISE STATED

SPECIFICATIONS SUBJECT TO CHANGE WITHOUT NOTICE

COMPONENTS

RAIL CLAMPS - Galvanised

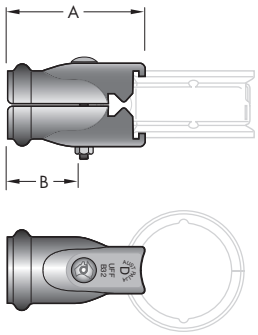

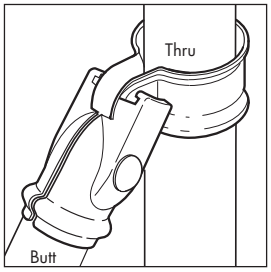

CODE	BUTT	A	B	BOLT	CTN
UFFB25	25	89	48	M10x75	40(8x5)
#UFFB32	32	103	57	M10x75	30(6x5)
#UFFB40	40	102	56	M10x75	30(6x5)
UFFB50	50	109	60	M10x80	20(4x5)

- All Rail Clamps are completely interchangeable with all Post Clamps.
- Rail Clamp can be attached directly to the Post Clamp ear to allow vertical adjustability from 30°-150°.
- Australian Patent No. 723014.

Available in powder coated finish (Black or Brunswick Green).

POST CLAMPS - Galvanised

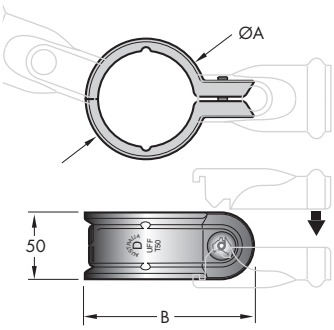

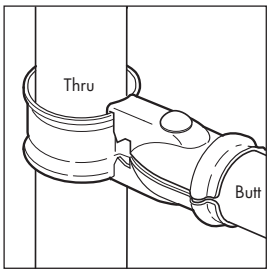

RAIL CLAMP COMPLETELY COVERS POST CLAMP EAR

CODE	THRU	A	B	BOLT	CTN
UFFT25	25	50	80	M10x20	50(10x5)
UFFT32	32	59	90	M10x20	40(8x5)
UFFT40	40	64	96	M10x20	40(8x5)
#UFFT50	50	76	110	M10x20	40(8x5)
UFFT65	65	92	124	M10x20	30(6x5)
#UFFT80	80	105	137	M10x20	20(4x5)
UFFT100	100	130	161	M10x30	20(4x5)

- All Post Clamps are completely interchangeable with all Rail Clamps.
- Rail Clamps are designed to completely cover Post Clamp ear.
- Australian Patent No. 723014.

Available in powder coated finish (Black or Brunswick Green).

MULTI-PURPOSE CONNECTOR - Galvanised

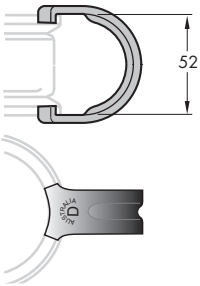

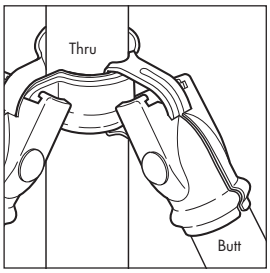

INCREASED STRENGTH AND HOLDING POWER

CODE	DESCRIPTION	CTN
UFFMPC	ADJUSTABLE RAIL ACCESSORY	100(10x10)

- Multi-purpose connector suitable with all post and rail clamps.
- Use for multi staying of posts, corner struts, raked fences and all add-on fencing situations.
- Design Registrations apply.

WALL BRACKET ASSEMBLY - Zinc

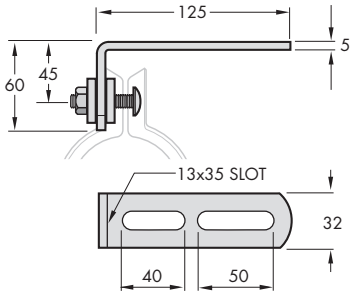

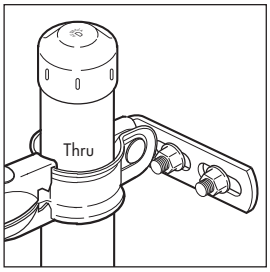

CODE	DESCRIPTION	CTN
UFFWB	WALL BRACKET	50(10x5)

- Used with UFFB and UFFT (all combinations) for spacing and securing post from wall, allows easy access for wire lacing and close fitment of post to wall.
- Comprises: 1 x G20A-1 Adjustable Bracket
  2 x Hexagonal Spacer Washer
  1 x M10x40 Bolt

© COPYRIGHT 2010 DOWNEE

ALL DIMENSIONS IN MILLIMETERS UNLESS OTHERWISE STATED

SPECIFICATIONS SUBJECT TO CHANGE WITHOUT NOTICE

FIXED TEES - Galvanised

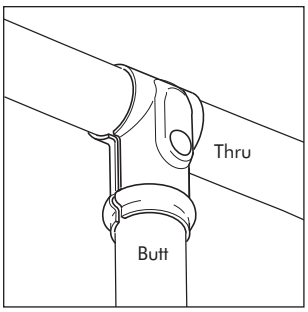

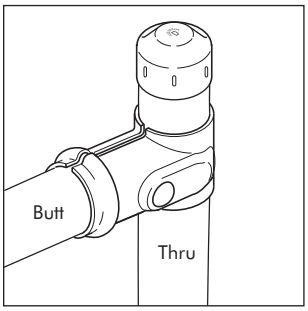

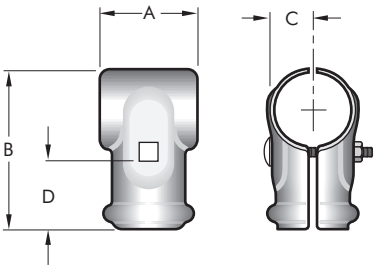

CODE	THRU	BUTT	BOLT	A	B	C	D	CTN/PACK
T1515	15	15	M6x45	33	56	16	26	150(15x10)
T2015	20	15	M8x50	34	63	19	27	80(4x20)
T2020	20	20	M8x50	38	67	21	28	100(10x10)
T2025	20	25	M8x60	44	65	24	25	70(14x5)
T2520	25	20	M8x60	40	70	21	25	80(16x5)
T2525	25	25	M8x60	43	74	24	29	50(10x5)
T2532	25	32	M10x70	65	81	28	33	40(8x5)
T2540	25	40	M10x80	77	97	32	47	30(6x5)
T3225	32	25	M10x60	57	97	27	41	40(8x5)
T3232	32	32	M10x70	65	96	28	40	40(8x5)
#T3240	32	40	M10x80	77	110	32	51	20(4x5)
T3250	32	50	M10x90	83	111	38	53	20(4x5)
T4025	40	25	M10x60	62	100	30	38	40(8x5)
T4032	40	32	M10x70	66	107	31	45	30(6x5)
T4040	40	40	M10x80	76	114	34	50	20(4x5)
T4050	40	50	M10x90	83	118	38	51	10(2x5)
T5025	50	25	M10x60	62	11	63	73	30(6x5)
#T5032	50	32	M10x70	69	12	33	74	30(6x5)
T5040	50	40	M10x80	75	12	73	95	20(4x5)
T5050	50	50	M10x90	84	130	39	54	10(2x5)
T6550	65	50	M12x100	89	157	47	63	10(2x5)
T8025	80	25	M10x75	63	148	54	40	20(4x5)
#T8032	80	32	M10x80	69	161	53	56	10(2x5)
T8040	80	40	M10x85	76	162	55	53	10(2x5)
T8050	80	50	M12x100	89	170	55	62	10(2x5)

Available in powder coated finish (Black or Brunswick Green).
• Bolt and nut included.

FIXED CROSSES - Galvanised

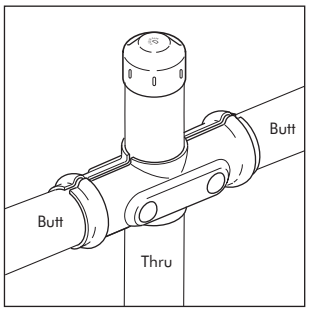

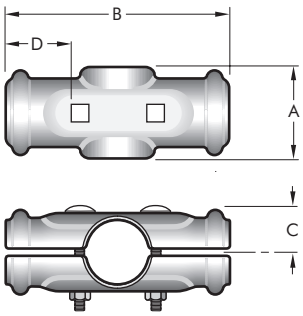

CODE	BUTT	THRU	BOLT	A	B	C	D	CTN/PACK
X1515	15	15	M6x45	34	90	17	26	100(10x10)
X2020	20	20	M8x50	47	111	21	34	50(10x5)
X2025	20	25	M8x60	46	110	24	29	40(8x5)
X2525	25	25	M8x60	52	123	24	36	30(6x5)
X2532	25	32	M10x60	57	142	28	37	20(4x5)
X2540	25	40	M10x60	60	154	30	41	30(6x5)
X2550	25	50	M10x75	64	170	39	43	20(4x5)
X3232	32	32	M10x70	65	148	28	41	20(4x5)
#X3240	32	40	M10x75	63	150	32	40	20(4x5)
X3250	32	50	M10x75	68	177	88	43	10(2x5)
X4040	40	40	M10x80	77	151	33	40	20(4x5)
X4050	40	50	M10x85	76	186	38	50	10(2x5)
X5050	50	50	M12x100	89	195	41	55	10(2x5)
X5065	50	65	M12x100	91	232	48	63	10(2x5)

Available in powder coated finish (Black or Brunswick Green).
• Bolts and nuts included.

© COPYRIGHT 2010 DOWNEE

ALL DIMENSIONS IN MILLIMETERS UNLESS OTHERWISE STATED

SPECIFICATIONS SUBJECT TO CHANGE WITHOUT NOTICE

FIXED CORNERS - Galvanised

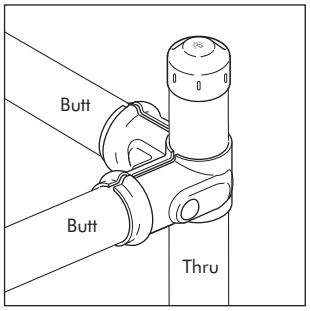

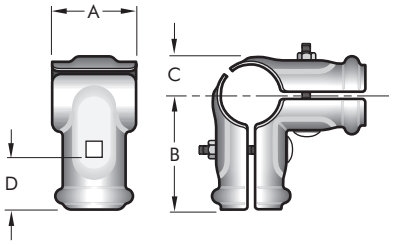

CODE	BUTT	THRU	BOLT	A	B	C	D	CTN/PACK
C1515	15	15	M6x45	36	62	17	31	70(14x5)
C2020	20	20	M8x50	47	71	21	33	40(8x5)
C2025	20	25	M8x60	47	73	21	35	30(6x5)
C2525	25	25	M8x60	59	79	24	35	30(6x5)
C2532	25	32	M10x60	56	80	25	36	20(4x5)
C2540	25	40	M10x60	57	80	25	36	20(4x5)
C2550	25	50	M10x70	60	91	29	43	20(4x5)
C3232	32	32	M10x75	64	100	32	48	20(4x5)
C3240	32	40	M10x75	63	100	32	46	10(2x5)
#C3250	32	50	M10x80	70	104	33	51	30(6x5)
C4040	40	40	M10x80	71	104	36	45	10(2x5)
C4050	40	50	M10x85	79	104	35	45	10(2x5)
C5050	50	50	M12x100	90	120	42	52	5(1x5)

Available to order in powder coated finish (Black or Brunswick Green)

- Bolts and nuts included

FIVE WAY TEES - Galvanised

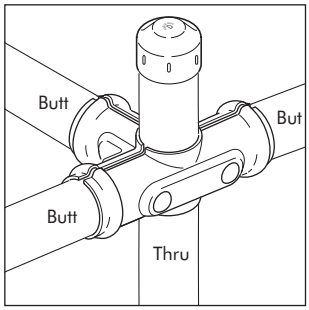

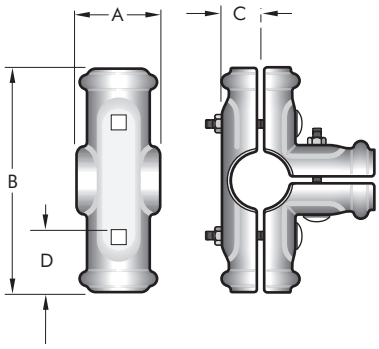

CODE	BUTT	THRU	BOLT	A	B	C	D	CTN/PACK
FT2525	25	25	M8X60	57	156	25	35	20(4x5)
FT2532	25	32	M10X60	56	159	28	35	20(4x5)
FT3240	32	40	M10X75	67	196	36	4	10(2x5)

- Bolts and nuts included.

© COPYRIGHT 2010 DOWNEE

ALL DIMENSIONS IN MILLIMETERS UNLESS OTHERWISE STATED

SPECIFICATIONS SUBJECT TO CHANGE WITHOUT NOTICE

SPEEDEE SLEEVES - External Fitment - Galvanised

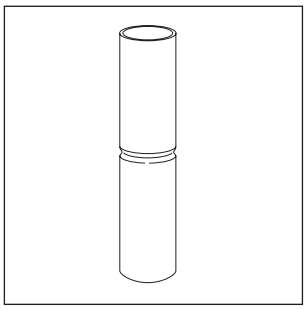

CODE	PIPE	LENGTH	CTN
SS20	20	150	30
SS25	25	150	30
SS32	32	200	25
SS40	40	200	20
SS50	50	200	10

- Ideal for extending pipe for fences, enclosures, or any gal pipe application – practical and cost saving off cut utilisation.
- Not suitable for reticulation work.
- Registered Design – 151966.

© COPYRIGHT 2010 DOWNEE

ALL DIMENSIONS IN MILLIMETERS UNLESS OTHERWISE STATED

SPECIFICATIONS SUBJECT TO CHANGE WITHOUT NOTICE

ROUND POST CAPS - Galvanised

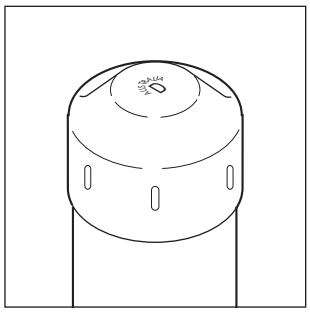

CODE	PIPE	FINISH	A	B	CTN
K20	20NB	GALVANISED	27	20	200
K25	25NB	GALVANISED	34	30	150
K32	32NB	GALVANISED	43	30	100
#K40	40NB	GALVANISED	49	30	80
#K50	50NB	GALVANISED	60	30	50
K65	65NB	GALVANISED	77	37	30
K80	80NB	GALVANISED	89	40	20
K90	90NB	GALVANISED	101	43	20
K100	100NB	GALVANISED	113	40	20

ROUND POST CAPS - Galvabond

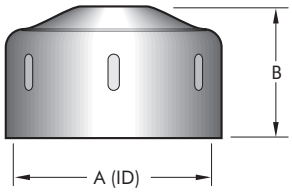

CODE	PIPE	FINISH	A	B	CTN
K16GB	16	GALVABOND	16	12	1000
K19GB	19	GALVABOND	19	13	1000
K20GB	20NB	GALVABOND	27	20	300
K25GB	25NB	GALVABOND	34	30	150
K32GB	32NB	GALVABOND	43	30	100
K40GB	40NB	GALVABOND	49	30	80
K50GB	50NB	GALVABOND	60	30	50
K65GB	65NB	GALVABOND	77	37	50
K80GB	80NB	GALVABOND	89	40	40
K90GB	90NB	GALVABOND	101	43	40
K100GB	100NB	GALVABOND	113	40	20
K125GB	125NB	GALVABOND	140	40	20
K150GB	150NB	GALVABOND	165	40	10

Available in powder coated finish (Black or Brunswick Green).

CAP ATTACHMENT RECOMMENDATION

- Tap on directly using a dead blow (synthetic head) mallet, or
- Tap on with hammer using a short length of same size pipe as a dolly.

DOME PLUGS - Plastic

- Minimum purchase of 100 pieces and sold in multiples of 100.
- Hides unsightly screws and bolts.
- Textured face allows for good paint adhesion.

CODE	HOLE	COLOUR	CARTON
DPB12	Ø12mm	BLACK	100
DPW12	Ø12mm	WHITE	100
DPB16	Ø16mm	BLACK	100
DPW16	Ø16mm	WHITE	100
DPB19	Ø19mm	BLACK	100
DPW19	Ø19mm	WHITE	100
DPB22	Ø22mm	BLACK	100
DPW22	Ø22mm	WHITE	100
DPB25	Ø25mm	BLACK	100
DPW25	Ø25mm	WHITE	100

© COPYRIGHT 2010 DOWNEE

ALL DIMENSIONS IN MILLIMETERS UNLESS OTHERWISE STATED

SPECIFICATIONS SUBJECT TO CHANGE WITHOUT NOTICE

ROUND POST CAPS - Flat - Galvabond

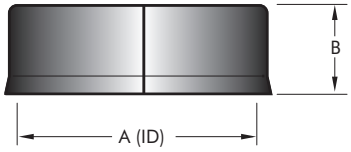

FLAT TYPE

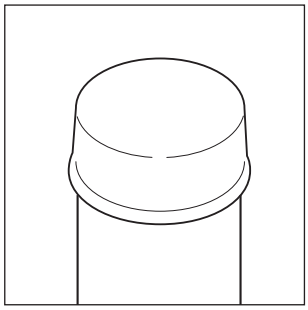

CODE	PIPE	A	B	CTN
K40FGB	40NB	49	30	100
K50FGB	50NB	60	30	50

OVAL TUBE CAP - Galvabond

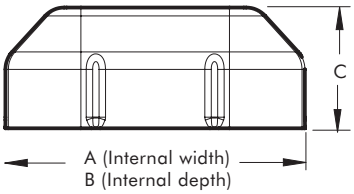

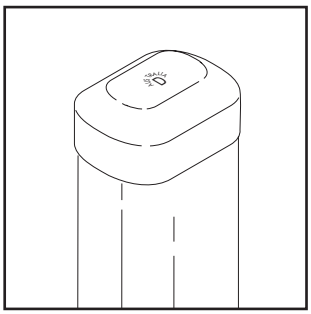

CODE	TUBE	A	B	C	CTN
K5335-O-GB	53x35	53	35	21	100

- To suit Yard Rail Flat Sided Oval 65x45 tube.

SQUARE TUBE POST CAPS - Profile - Galvabond

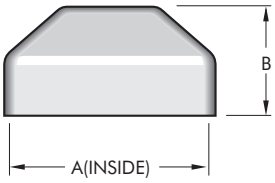

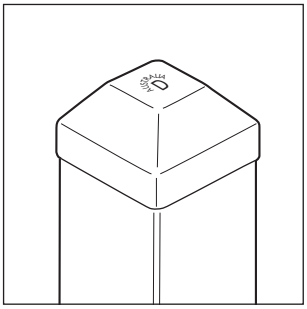

CODE	TUBE	FINISH	A	B	CTN
K25MSGB	25x25	GALVABOND	25	18	300
K35MSGB	35x35	GALVABOND	35	24	150
K40MSGB	40x40	GALVABOND	40	26	150
K50MSGB	50x50	GALVABOND	50	28	100
K60MSGB	60x60	GALVABOND	60	30	50
K65MSGB	65x65	GALVABOND	65	32	50
K75MSGB	75x75	GALVABOND	75	32	60
K90MSGB	90x90	GALVABOND	90	32	20
K100MSGB	100x100	GALVABOND	100	32	30

SQUARE TUBE POST CAPS - Flat - Galvabond

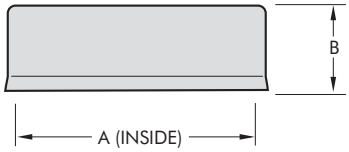

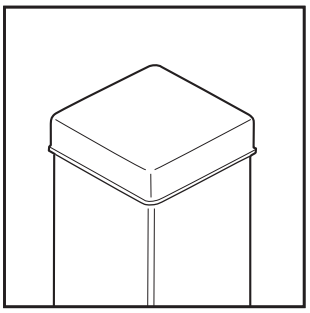

CODE	TUBE	A	B	CTN
K90MSGBF	90x90	90	21	40
K100MSGBF	100x100	100	21	30

© COPYRIGHT 2010 DOWNEE

ALL DIMENSIONS IN MILLIMETERS UNLESS OTHERWISE STATED

SPECIFICATIONS SUBJECT TO CHANGE WITHOUT NOTICE

ROUND PLASTIC CAPS - Polypropylene - Black

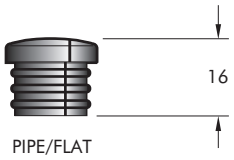

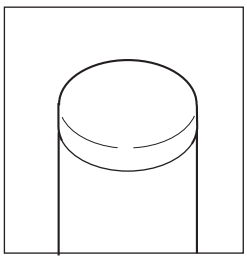

CODE	PIPE	BAG
PC16BL	16mmx1.6-2.0mm	1000
PC19BL	19mmx1.6-2.0mm	1000
PC22BL	22mmx1.6-2.0mm	1000
PC25BL	25mmx1.6-2.0mm	500
PC28BL	28mmx1.6-2.0mm	500
PC50BL	50mmx1.6-2.0mm	200

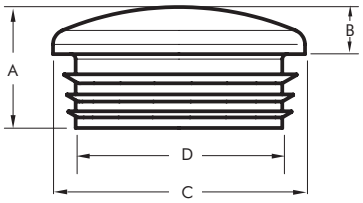

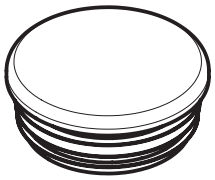

CODE	PIPE	A	B	C	D	BAG
IPC25NB	25NB	20.7	6	33.7	22.2	50
IPC32NB	32NB	24.7	7.4	42.4	30.9	50
IPC40NB	40NB	27.2	8.5	48.3	34.6	50
IPC50NB	50NB	30.7	10.5	59.4	46.3	50
IPC50OD	50OD	17	5	49	41	50
IPC65NB	65NB	35.4	14	74.5	76.1	20
IPC80NB	80NB	26	4	88.9	76	20
IPC90NB	90NB	24	5	101	92	20
IPC100NB	100NB	34	6	114	99	20
IPC125NB	125NB	41	5.5	139.5	123	10
IPC150NB	150NB	40	6	168.3	147	10

- Caps to suit nominated pipe only.

RECTANGULAR TUBE PLASTIC CAPS - Flat - Polypropylene - Black

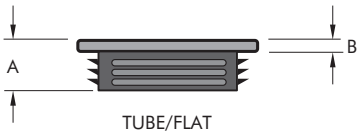

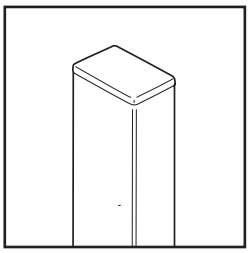

CODE	TUBE	A	B	BAG
IPC5025	50x25x1.2-3.0	20	4	50
IPC7525	75x25x1.0-3.0	19	4	20
IPC7638	76x38x1.2-1.6	22	3	20
IPC7550	75x50x2.0-4.0	20	5	20
IPC10050	100x50x4.0-6.3	25	5	20

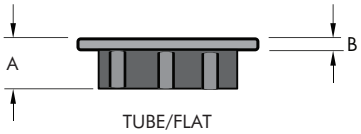

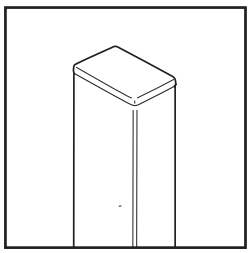

PC3825BL	38x25x1.5-1.6	14	3	200
PC5025BL	50x25x1.5-1.6	16	4.5	200
PC6535BL	65x35x1.6	18	4	100
PC6438BL	64x38x1.6-2.0	19	4	50
PC7550F	75x50x1.6-2.0	15	4	150
PC10050F	100x50x1.6-2.0	13	4	100
PC15050F	150x50x1.6-2.0	13	3	80

© COPYRIGHT 2010 DOWNEE

ALL DIMENSIONS IN MILLIMETERS UNLESS OTHERWISE STATED

SPECIFICATIONS SUBJECT TO CHANGE WITHOUT NOTICE

SQUARE TUBE CAPS - Profile - Polypropylene - Internal Fit

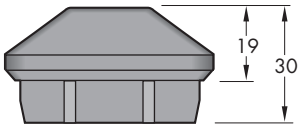

TUBE/PROFILED

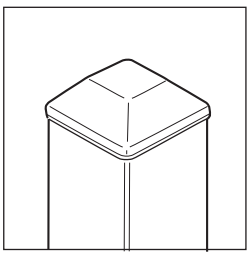

CODE	TUBE	CTN
PC5050BL	50x50x2.0-2.5	100
PC6060BL	60x60x2.0x2.5	70
PC6565BL	65x65x2.0-2.5	40

- Caps to suit nominated tube only.

SQUARE TUBE CAPS - Flat - Polypropylene - Internal Fit

TUBE/FLAT

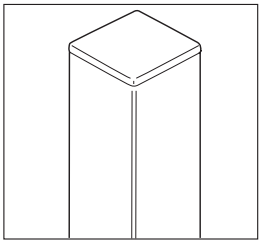

CODE	TUBE	A	B	CTN
PC1212BL	12x12x1.6-2.0mm	28	5	1000
PC1919BL	19x19x1.2-1.6mm	15	3	500
PC2525BL	25x25x1.2-1.6mm	15	3	500
PC3030BL	30x30x1.2-1.6mm	17	3.5	300
PC3535BL	35x35x1.2-1.6mm	16	3	1000
PC4040BL	40x40x1.2-1.6mm	14	3	200
PC5050FLAT	50x50x1.2-1.6mm	28	3	100

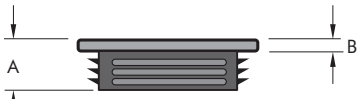

TUBE/FLAT

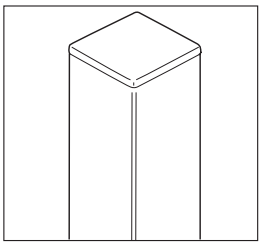

IPC2525	25x25x1.0-3.0	15	4	50
IPC4040	40x40x1.6-4.0	21	6	50
IPC5050	50x50x0.82-2.5	20	4	150
IPC5050-5	50x50x3.2-5.0	25	7	50
IPC6060	60x60x1.5-3.5	13	3	20
IPC6565	65x65x2.0-4.5	25	4	20
IPC7575	75x75x1.0-3.0	25	5	20
IPC9090	90x90x2.0-5.0	28	4	20
IPC100100	100x100x4.0-6.3	30	5	20
IPC125125	125x125x3.0-5.0	30	5	10
IPC150150	150x150x5.0-8.0	30	5	10

SQUARE TUBE CAPS - Profile - Black Polypropylene - External Fit

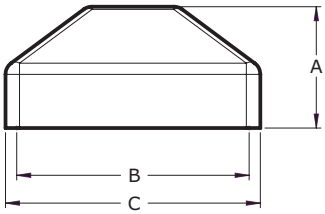

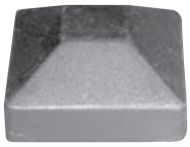

CODE	TUBE	A	B	C	CTN
PC5050EXT	50mmx50mm	26	54.6	49.8	500

© COPYRIGHT 2010 DOWNEE

ALL DIMENSIONS IN MILLIMETERS UNLESS OTHERWISE STATED

SPECIFICATIONS SUBJECT TO CHANGE WITHOUT NOTICE

HORIZONTAL - 1 Fixing Hole

CODE	RAIL	CTN
FB25H	25x25	180
FB30H	30x30	150
FB32H	32x32	150

- Allows for Horizontal Rail Adjustment.

HORIZONTAL- 2 Fixing Holes

CODE	RAIL	CTN
FB38H	38x25	120

- Allows for Horizontal Rail Adjustment.

VERTICAL- Single Fixing Hole

CODE	RAIL	CTN
FB25V	25x25	180
FB30V	30x30	150
FB32V	32x32	150

- Allows for Vertical Rail Adjustment.
- Design Registration NO. 119326.

VERTICAL - 2 Fixing Holes

CODE	RAIL	CTN
FB38V	38x25	120

- Allows for Vertical Rail Adjustment.
- Design Registration NO. 119326.

© COPYRIGHT 2010 DOWNEE

ALL DIMENSIONS IN MILLIMETERS UNLESS OTHERWISE STATED

SPECIFICATIONS SUBJECT TO CHANGE WITHOUT NOTICE

PLAIN - 1 Fixing Hole

CODE	RAIL	CTN
FB40X8P	40x8	200
FB40X10P	40x10	200

PLAIN - 2 Fixing Holes

CODE	RAIL	CTN
FB38P	38x25	90
FB40P	40x40	80

PLAIN - 2 Fixing Holes

CODE	RAIL	CTN
FB50P	50x50	25

MULTI DIRECTIONAL - 2 Fixing Holes

CODE	RAIL	CTN
FB38MD	38x25	120

The unique design allows for vertical adjustment of 15° up or down without having to cut the rail or bracket. The screw holes on the face of the bracket are set at 8° to allow easy access and minimal interference when driving the tek screws home.

© COPYRIGHT 2010 DOWNEE

ALL DIMENSIONS IN MILLIMETERS UNLESS OTHERWISE STATED

SPECIFICATIONS SUBJECT TO CHANGE WITHOUT NOTICE

HORIZONTAL - 2 Fixing Holes

CODE	RAIL	CTN
FB25HDL	25x25	150
FB30HDL	30x30	130

- Allows for Horizontal Rail Adjustment.

HORIZONTAL - Offset 3 Fixing Holes

CODE	RAIL	CTN
FB38HDLO	38x25	120

- Allows for Horizontal Rail Adjustment.

PLAIN - 2 Fixing Holes

CODE	RAIL	CTN
FB2538PDL	25x38	90

© COPYRIGHT 2010 DOWNEE

ALL DIMENSIONS IN MILLIMETERS UNLESS OTHERWISE STATED

SPECIFICATIONS SUBJECT TO CHANGE WITHOUT NOTICE

PLAIN - Offset 3 Fixing Holes

CODE	RAIL	CTN
FB38PDLO	38x25	90

PLAIN - 4 Fixing Holes

CODE	RAIL	CTN
FB40PDL	40x40	60

PLAIN- 4 Holes + Security Fixing Hole

CODE	RAIL	CTN
FB50PDL	50x50	25

ROUND - 2 Fixing Holes

CODE	RAIL	CTN
FB31.8R	31.80	120

© COPYRIGHT 2010 DOWNEE

ALL DIMENSIONS IN MILLIMETERS UNLESS OTHERWISE STATED

SPECIFICATIONS SUBJECT TO CHANGE WITHOUT NOTICE

RAIL BRACKETS - Single Lug - Zinc Plated

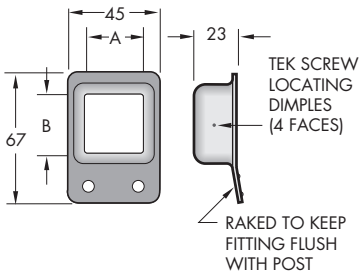

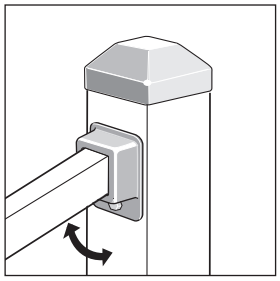

AVAILABLE SINGLE LUG RAIL BRACKETS

CODE	RAIL	HOLES	A	B	CTN
RFB2525-2Z	25x25	2	25	25	100
RFB3030-2Z	30x30	2	30	30	100
RFB3825-2Z	38x25	2	38	25	100

- All fittings allow for VERTICAL rake. More acute rake angles can be achieved by mitre-ing end of rail.
- A comprehensive range of fasteners is available.

RAIL BRACKETS - Double Lug - Zinc Plated

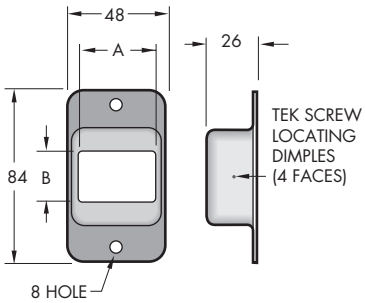

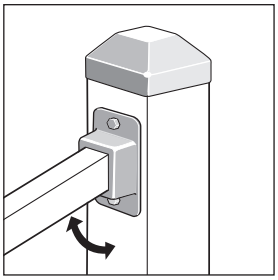

AVAILABLE DOUBLE LUG RAIL BRACKETS

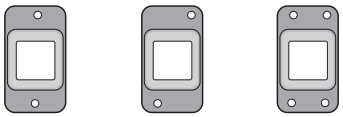

CODE	RAIL	HOLES	A	B	CTN
DFB2525-2Z	25x25	2	25	25	100
DFB3030-2Z	30x30	2	30	30	100
DFB3030-2DZ	30x30	2	30	30	100
DFB3825-2Z	38x25	2	38	25	100
DFB3825-2DZ	38x25	2DIAG.	38	25	100
DFB4040-2Z	40x40	2	40	40	100
DFB4040-2DZ	40x40	2DIAG.	40	40	100
DFB4040-4Z	40x40	4	40	40	100
DFB20-2DZ	20	2DIAG.	-	-	120

- All fittings allow for VERTICAL rake. More acute rake angles can be achieved by mitreing end of rail.
- A comprehensive range of fasteners is available.

ADJUSTABLE RAIL BRACKETS

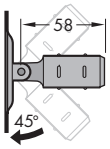

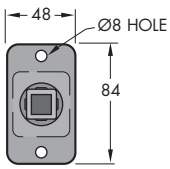

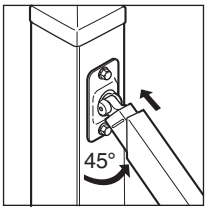

CODE	TO SUIT	CTN
RBA2525	25x25x1.2-1.6	50
	31.8x1.2-1.6	50
RBA2525-D	25x25x1.1-1.6	50

ADAPTORS - Click Fit to Rail Bracket

AD3030	30x30x1.2-1.6	100
AD3825	38x25x1.2-1.6	100
AD4040	40x40x1.2-1.6	100

Note: For 30x30, 38x25 &40x40 rails an appropriate adaptor attached to rail bracket is required.

- Australian Design Registration Nos 140193 & 140787

© COPYRIGHT 2010 DOWNEE

ALL DIMENSIONS IN MILLIMETERS UNLESS OTHERWISE STATED

SPECIFICATIONS SUBJECT TO CHANGE WITHOUT NOTICE

SECURITY RAIL BRACKETS - Galvanised

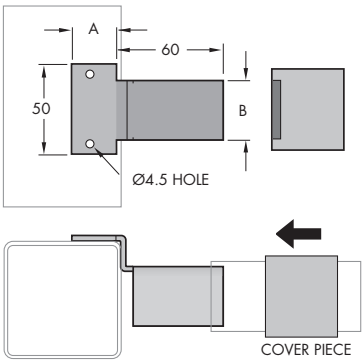

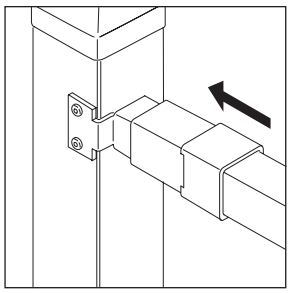

CODE	TUBE	A	B	BAG
SRB620-92	40x40	25	34	50
SRB620-92SV	30x30	20	25.5	50
COVER SLEEVE - TO SUIT SRB 620-92				
CUSMS	-	-	-	40

- Attach to post and rail by pop rivetting.
- A comprehensive range of fasteners is available.

ADJUSTABLE SECURITY RAIL BRACKET - Galvanised

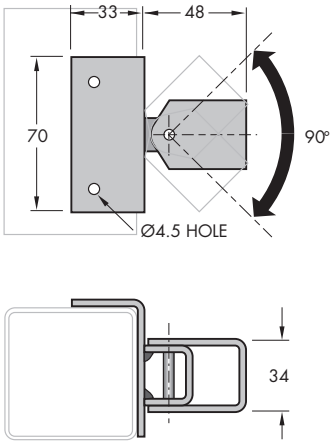

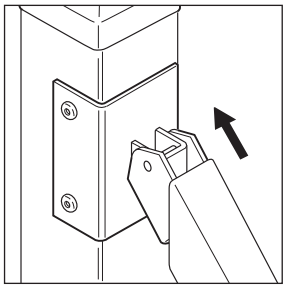

CODE	POST	RAIL	CTN
SRBA628-92	60x60	40x40	50

- Attach to post and rail by pop rivetting.
- A comprehensive range of fasteners is available.

FENCE PANEL 'U' CLIP - Galvabond, Galvanised or Zinc Plated

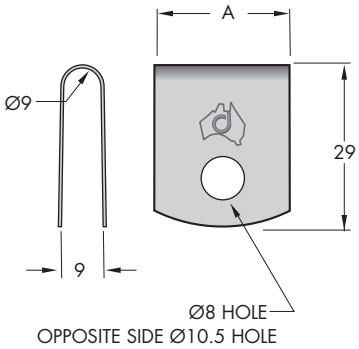

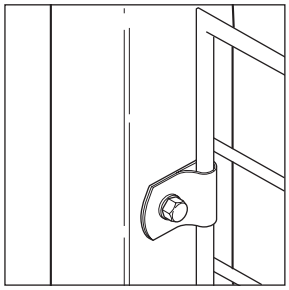

CODE	FINISH	A	CTN
UC8/10	GALVABOND	25	500
UC8/10G	GALVANISED	25	500
UC19G	GALVANISED	19	500

'U' CLIP, PANEL FIXING KITS

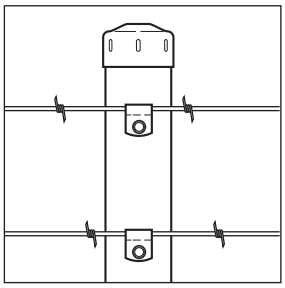

CODE	FINISH	A	CTN
FITS3X10-PK	GALVANISED	25	20
FITS/TEK20	GALVANISED	25	20
FITS/TEK100	GALVANISED	25	5

- Fixing kits include clip and hex bolt.
- Smaller hole should be fitted against post.
- Ideal for securing barbed wire.
- A comprehensive range of fasteners is available.

© COPYRIGHT 2010 DOWNEE

ALL DIMENSIONS IN MILLIMETERS UNLESS OTHERWISE STATED

SPECIFICATIONS SUBJECT TO CHANGE WITHOUT NOTICE

RAIL TUBE END BRACKETS - Galvanised

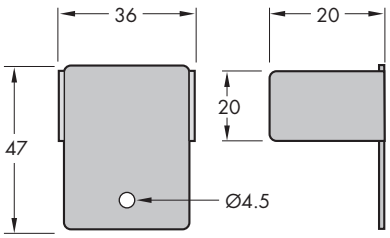

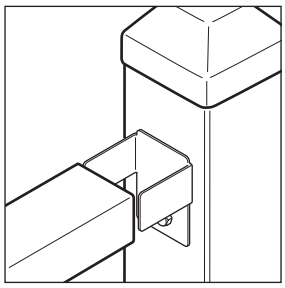

CODE	TUBE	CTN
TEB3825	38x25x1.6	100

- A comprehensive range of fasteners is available.

RAIL TUBE END BRACKETS - Black Plastic

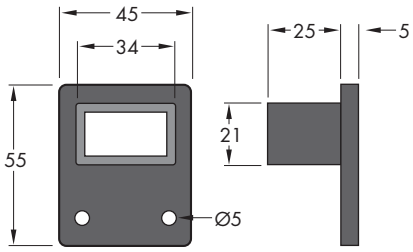

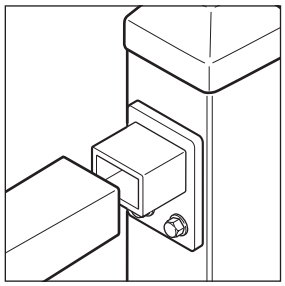

CODE	TUBE	CTN
PEC3825BL	38x25x1.6	500

- A comprehensive range of fasteners is available.

RAIL BRACKETS - Galvanised

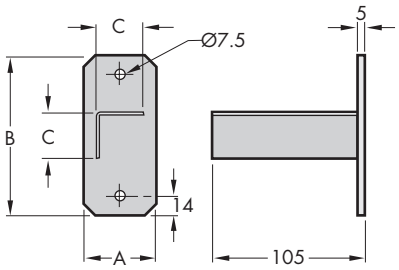

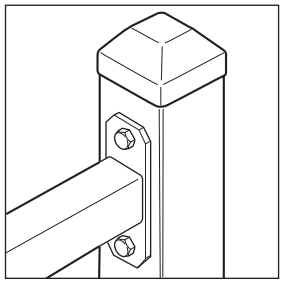

CODE	A	B	C	CTN
RB3030	40	100	25	30
RB4040	50	110	32	30

- A comprehensive range of fasteners is available.
- RB3030 Internal Support 25x25x105mm long.
- RB4040 Internal support 33x32x105mm long.

RAIL ANGLE BRACKETS - Galvanised or Aluminium

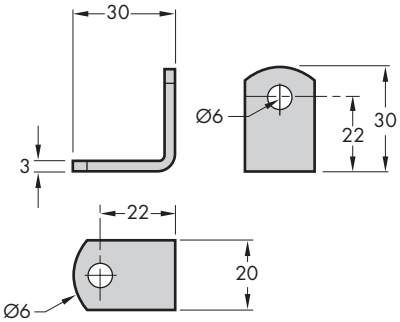

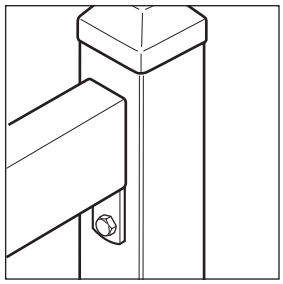

CODE	MATERIAL	CTN
RAB303	GALVANISED STEEL	500
RAB30X30	ALUMINIUM	500

- A comprehensive range of fasteners is available.

© COPYRIGHT 2010 DOWNEE

ALL DIMENSIONS IN MILLIMETERS UNLESS OTHERWISE STATED

SPECIFICATIONS SUBJECT TO CHANGE WITHOUT NOTICE

RAIL ADJUSTABLE ANGLE BRACKET - Galvanised & Aluminium

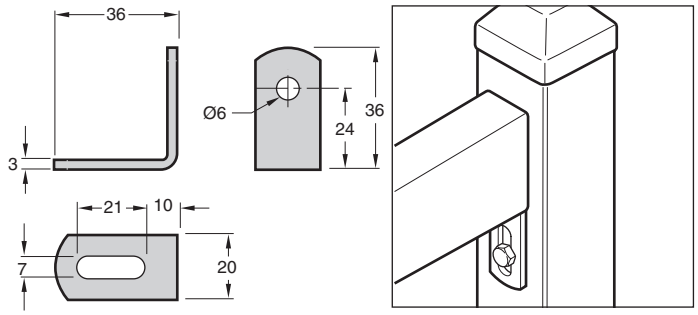

CODE	MATERIAL	CTN
RAB35X35	GALVANISED STEEL	500
RAB3535A	ALUMINIUM	500

- A comprehensive range of fasteners is available.

RAIL ADJUSTABLE ANGLE BRACKET - Galvanised

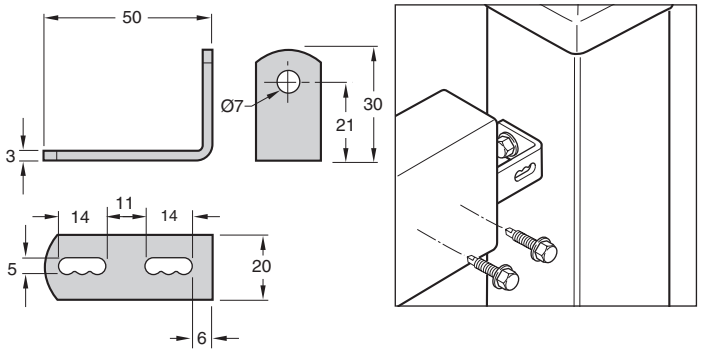

CODE	MATERIAL	CTN
RAB3050	GALVANISED STEEL	50

- A comprehensive range of fasteners is available.

RAIL LONG PLATE BRACKET - Galvanised

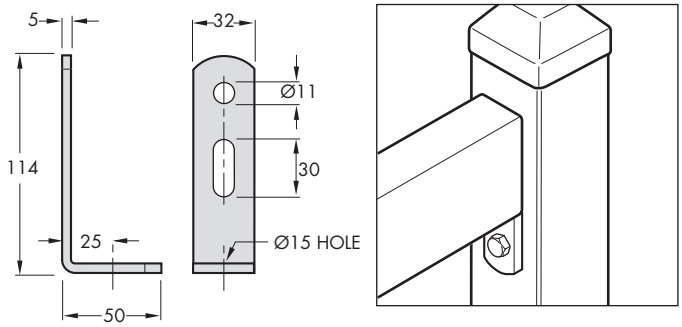

CODE	DESCRIPTION	CTN
G14	HEAVY DUTY BRACKET	50

- A comprehensive range of fasteners is available.

RAIL J BRACKET - Galvabond

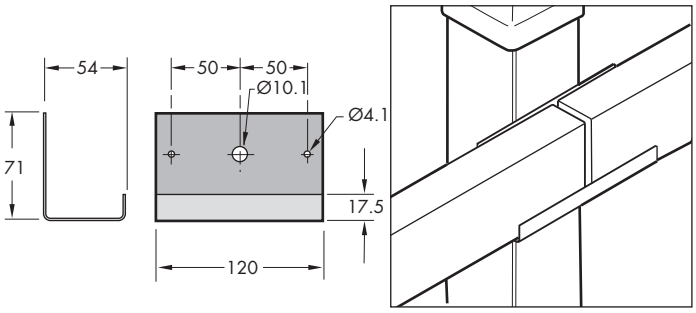

CODE	DESCRIPTION	CTN
J7154	TIMBER RAIL JOINING BRACKET	50

- A comprehensive range of fasteners is available.

© COPYRIGHT 2010 DOWNEE

ALL DIMENSIONS IN MILLIMETERS UNLESS OTHERWISE STATED

SPECIFICATIONS SUBJECT TO CHANGE WITHOUT NOTICE

RAIL HOLDER BRACKET - Galvanised

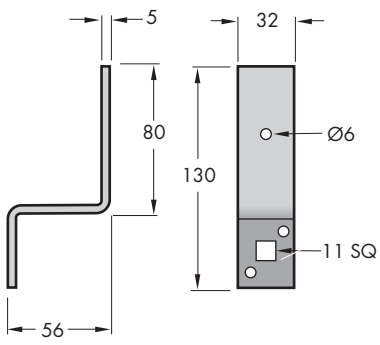

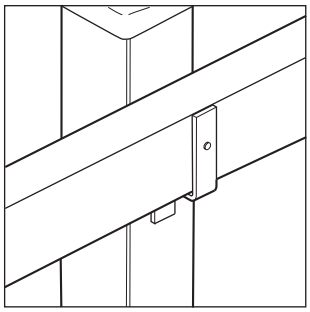

CODE	DESCRIPTION	CTN
RHB7553P	SUIT 75x53 TIMBER RAIL	50

- A comprehensive range of fasteners is available.

RAIL PLATES - Galvanised

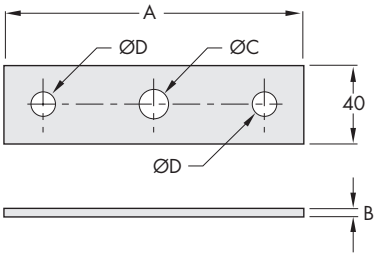

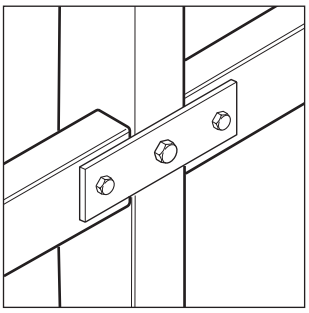

CODE	A	B	C	D	CTN
G86	153	5	15	12	50
G87	140	3	11	11	50

- A comprehensive range of fasteners is available.

RAIL SADDLES - Galvabond

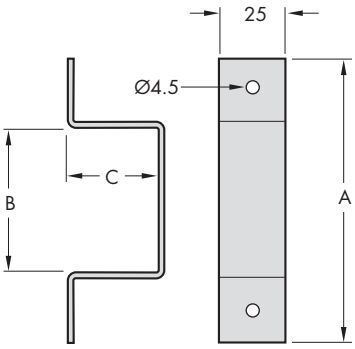

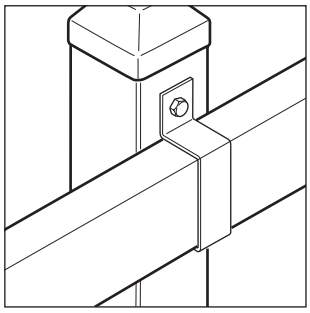

CODE	TUBE	A	B	C	CTN
RS3825	38x25	80	38.5	24	100
RS3535	35x35	73	35.5	37	100
RS4040	40x40	83	41.5	40	100

- A comprehensive range of fasteners is available.

RAIL JOINER - Galvabond

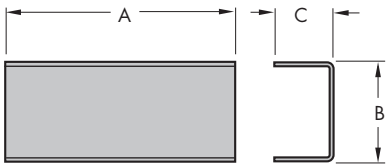

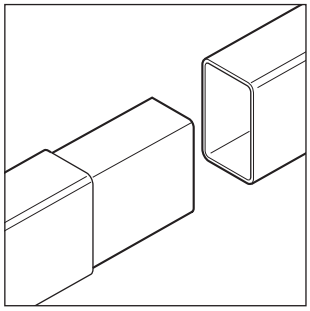

CODE	TUBE	A	B	C	CTN
RJ3825	38x25	109	35	21	50

- A comprehensive range of fasteners is available.

© COPYRIGHT 2010 DOWNEE

ALL DIMENSIONS IN MILLIMETERS UNLESS OTHERWISE STATED

SPECIFICATIONS SUBJECT TO CHANGE WITHOUT NOTICE

POST BRACKETS - Galvanised

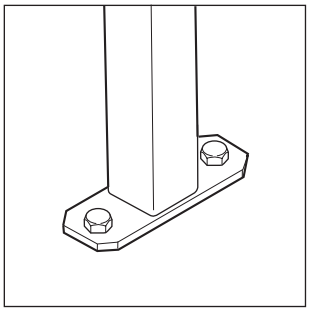

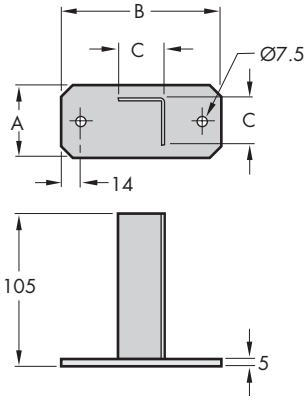

CODE	A	B	C	CTN
RB3030	40	100	25	30
RB4040	50	110	32	30

- A comprehensive range of fasteners is available.
- RB3030 Internal support 25x25x105mm long.
- RB4040 Internal support 25x25x105mm long.

POST BRACKET - Galvanised

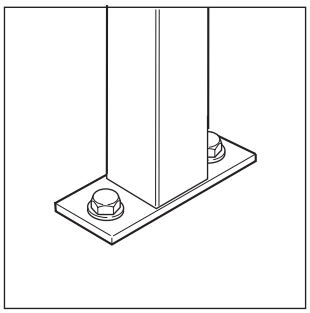

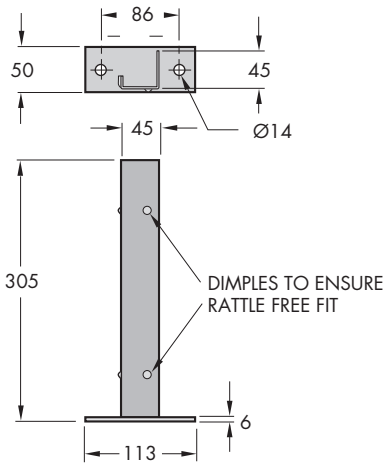

CODE	TUBE	CTN
PB13050	50x50x1.6	10

- Suits Flange Covers PLASTICBLA, PLASTICWHI, PLASTICPRI.
- A comprehensive range of fasteners is available.
- Internal Support 305mm long.

© COPYRIGHT 2010 DOWNEE

ALL DIMENSIONS IN MILLIMETERS UNLESS OTHERWISE STATED

SPECIFICATIONS SUBJECT TO CHANGE WITHOUT NOTICE

POST BRACKETS - Square Base - Galvanised

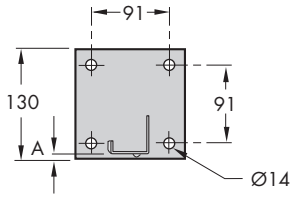

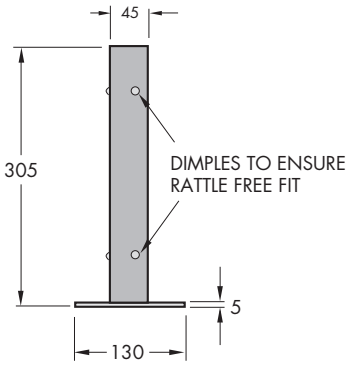

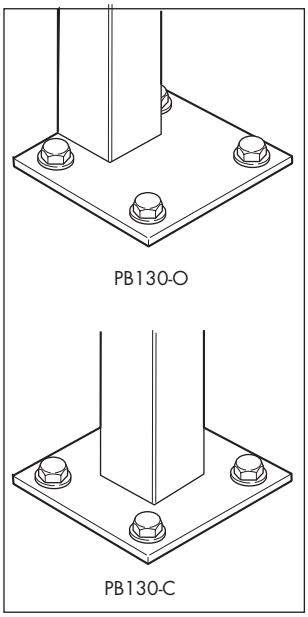

CODE	DESCRIPTION	TUBE	A	CTN
PB130-C	CENTRE BASE	50x50x1.6	42.5	4
PB130-O	OFFSET BASE	50x50x1.6	3	4

- A comprehensive range of fasteners is available.
- Internal support 305mm long.

SHARK FIN POST BRACKETS - Galvanised

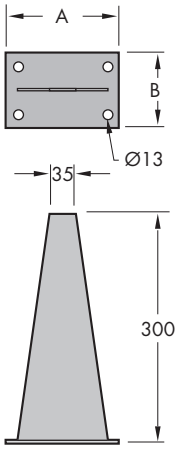

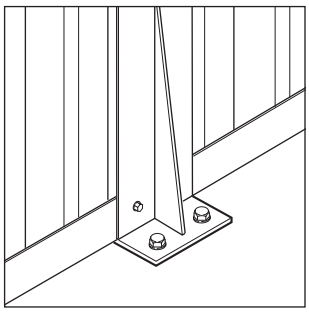

CODE	A	B	DESCRIPTION	CTN
SF1	150	100	POST BRACKET	5
SF2	100	100	POST BRACKET	5

- Suits steel panel fencing.
- SF2 can also be used on a100mm block wall.
- A comprehensive range of fasteners is available.

© COPYRIGHT 2010 DOWNEE

ALL DIMENSIONS IN MILLIMETERS UNLESS OTHERWISE STATED

SPECIFICATIONS SUBJECT TO CHANGE WITHOUT NOTICE

SQUARE FLANGE PLATE - Weld on - Galvanised

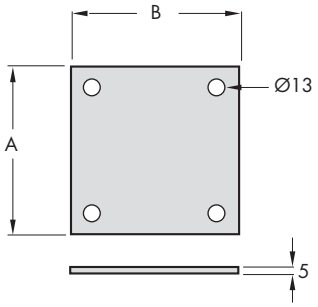

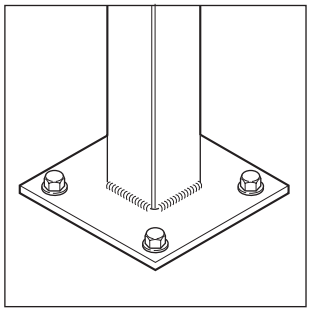

CODE	A	B	C	D	CTN
F100SP	100	100	5	13	50
F130SP	130	130	5	13	20

- A comprehensive range of fasteners is available.

RECTANGULAR FLANGE PLATES - Weld on - Galvanised

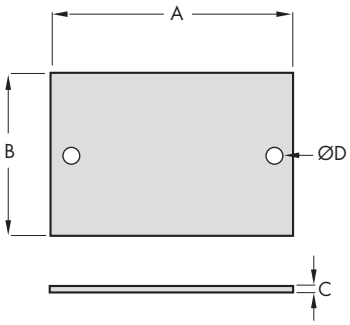

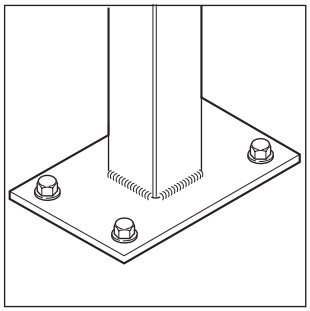

CODE	A	B	C	D	HOLES	CARTON
RFP11350-2	113	50	6	13	2	20
RFP15075-2	150	75	5	14	2	30
RFP20095-2	200	95	8	13	2	10
RFP13090-4	130	90	5	11	4	20
RFP150100-4	150	100	5	13	4	20

- Plasticbla, Plasticwhi, Plasticpri and Plastic Flange Covers can be used with RFP11350-2.
- A comprehensive range of fasteners is available.

RECTANGULAR FLANGE PLATES - Weld on - Zinc Plated

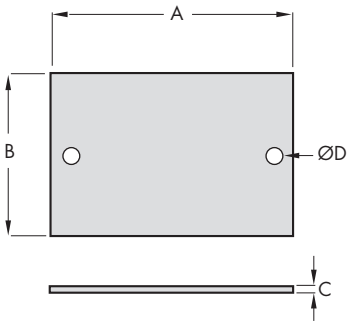

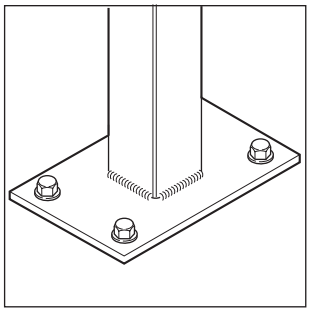

CODE	A	B	C	D	HOLES	CARTON
RFP13080-2	130	80	5	12.5	2	30
RFP130100-4	130	100	5	13	4	20
RFP130130-4	130	130	10	14	4	10

FLANGE COVER - ABS Plastic

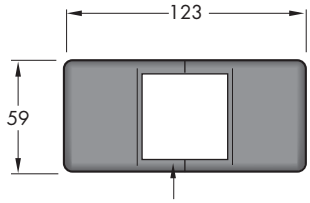

SNAP OUT PANELS ALLOWS FITTING TO SUIT 40x40, 40x25, 38x25 AND 50x50 POSTS.

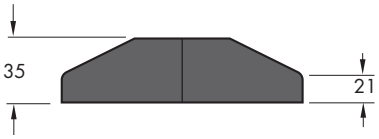

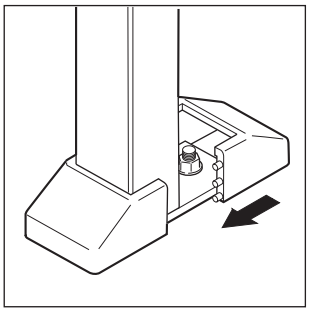

CODE	COLOUR	CTN
PLASTICBLA	BLACK	30
PLASTICWHI	WHITE	30
PLASTICPRI	PRIMROSE	30

- Comes ready to fit 38x25 posts. Snap out panels allow fitting to suit 40x25, 40x40, and 50x50 posts.
- Suits RFP11350-2 Flange Plate and PB13050 Post Bracket.
- Conceals bolts and welding.
- Allows vertical adjustment to conceal packers or uneven floor.
- Other colours available on application.

© COPYRIGHT 2010 DOWNEE

ALL DIMENSIONS IN MILLIMETERS UNLESS OTHERWISE STATED

SPECIFICATIONS SUBJECT TO CHANGE WITHOUT NOTICE

SQUARE FLANGES - Galvanised

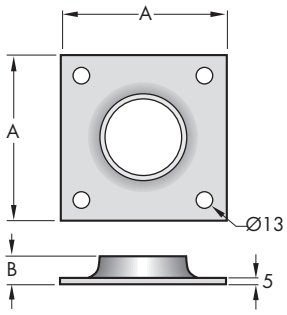

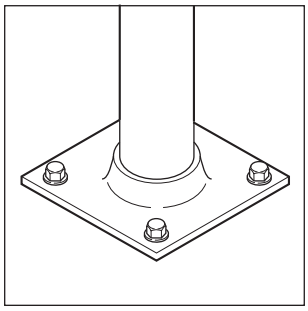

CODE	PIPE	A	B	CTN
F32H	32NB	100	19	30
F40H	40NB	100	21	30
F50H	50NB	130	21	20

- A comprehensive range of fasteners is available.

SQUARE RHS FLANGE - Weld on - Heavy Duty - Galvanised

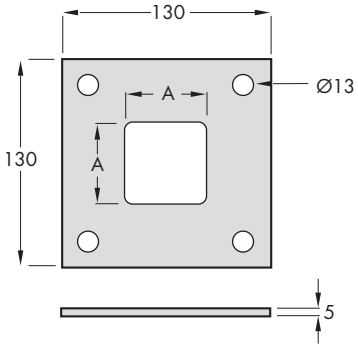

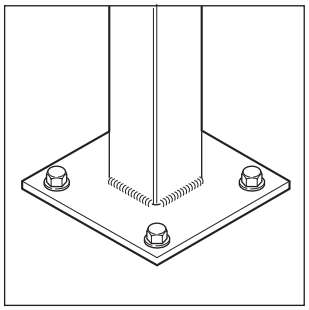

CODE	DESCRIPTION	A	CTN
F130S50	SUIT 50X50 RHS TUBE	51 x 51	20

- A comprehensive range of fasteners is available.

OVAL FLANGES - Galvanised

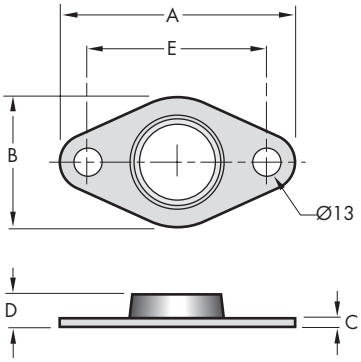

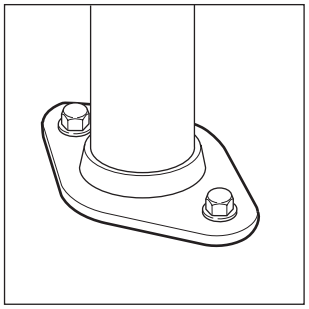

CODE	PIPE	A	B	C	D	E	CTN
F20	20NB	90	50	4	13	63	100
F25	25NB	108	61	4	14	83	100
F32	32NB	123	75	4	16	97	50
F40	40NB	128	81	5	18	102	30
F50	50NB	145	98	5	21	113	30

- A comprehensive range of fasteners is available.

Available in powder coated finish (Black or Brunswick Green).

ROUND FLANGES - Galvanised

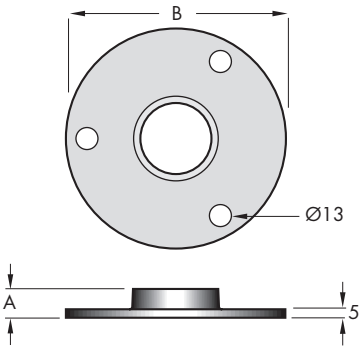

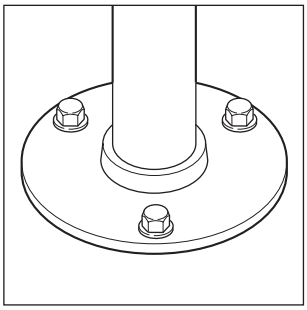

CODE	PIPE	A	B	CTN
F32R	32NB	16	130	20
F40R	40NB	18	130	20
F50R	50NB	20	130	20

- A comprehensive range of fasteners is available.

© COPYRIGHT 2010 DOWNEE

ALL DIMENSIONS IN MILLIMETERS UNLESS OTHERWISE STATED

SPECIFICATIONS SUBJECT TO CHANGE WITHOUT NOTICE

FENCE CLAMP HINGES - Galvanised

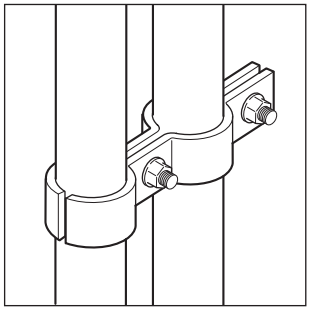

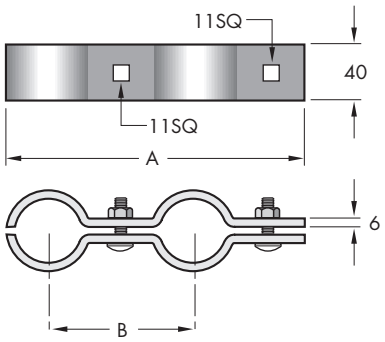

CODE	PIPE	A	B	BOLTS	CTN
THC4040	40x40	181	85	M10x38	10
THC5050	50x50	213	104	M10x38	10

TEMPORARY FENCE CLAMPS - Galvanised

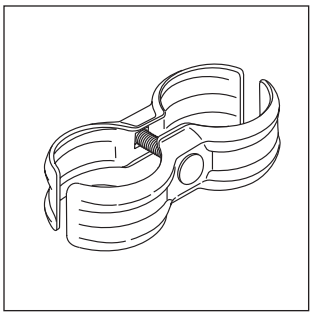

CODE	PIPE	CTN
TFCN2525	25x25	50
TFCN3232	32x32	20
TFCN4040	40x40	20
TFCN5050	50x50	20

© COPYRIGHT 2010 DOWNEE

ALL DIMENSIONS IN MILLIMETERS UNLESS OTHERWISE STATED

SPECIFICATIONS SUBJECT TO CHANGE WITHOUT NOTICE

WIRE STRAINER

CODE	DESCRIPTION	CTN
12106	WIRE STRAINER	200

STAR POST CAP - Yellow Polymer

CODE	DESCRIPTION	CTN
12322	STAR POST CAP	40

SQUARE POST EXTENSIONS- Galvanised

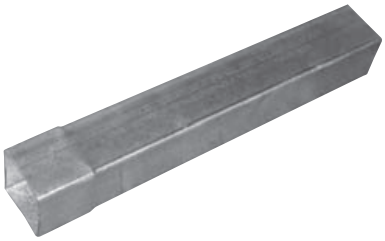

CODE	SUIT TUBE	LENGTH	CTN
PEXT50	50x50mm	350mm	10

© COPYRIGHT 2010 DOWNEE

ALL DIMENSIONS IN MILLIMETERS UNLESS OTHERWISE STATED

SPECIFICATIONS SUBJECT TO CHANGE WITHOUT NOTICE